| Item# | Qty | Description | MATERIAL |
|---|---|---|---|
| 1 | 3 | QUEEN METAL CROSS SLAT | METAL |
| 2 | 3 | METAL CENTER SUPPORT LEG 229MM | METAL |
| A97 | 6 | (A97) 1/4-20 X 25 Z BRACKET BOLT | METAL |
| A98 | 6 | (Z98) METAL BED RAIL Z BRACKET | METAL |
| B33 | 4 | (B33) METAL BOLT ON BED HOOK | METAL |
| G11 | 14 | (G11) 1/4-20 X 1 1/8 CAR BOLT | METAL |
| G14 | 1 | (G14) 7/16 METAL WRENCH | METAL |
| G5 | 3 | (G5) 1/4-20X30MM JOINT CONNECTOR | METAL |
| G9 | 14 | (G9) 1/4-20 SERRATED FLANGE NUT | METAL |
| H24 | 1 | (H24) ALLEN WRENCH | METAL |
| Z1A | 1 | (Z1A) BED RAIL BOLT PACK (14-CB) | METAL |
| Z1B | 1 | (Z1B) HARDWARE PACK | METAL |
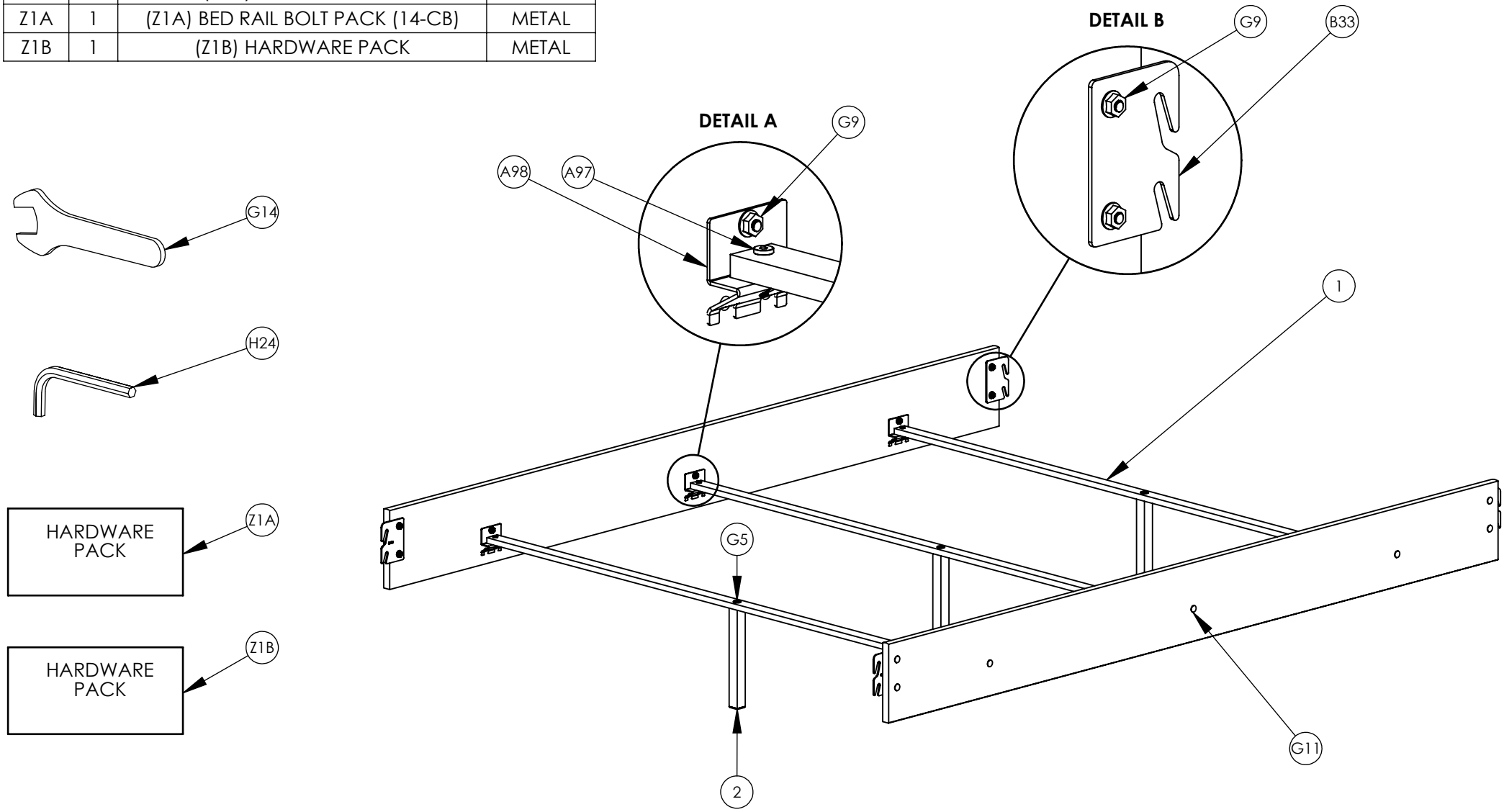
| | | | |
|---|---|---|---|
| Dwg#: 33750 | | ASHLEY Furniture Industries Inc. | |
| Scale: 1:25 | | TOLERANCES ARE: METRIC---------- +.5 / -.5mm DECIMAL---------- 0 / -.005" FRACTIONAL---------- +0/ -1/32" (UNLESS OTHERWISE SPECIFIED) | |
| Date: 12/21/2023 | | | |
| Desc: Qn Bed Rails (229) CS | | | |
| Rev. | Description | Date | Cad/Eng |